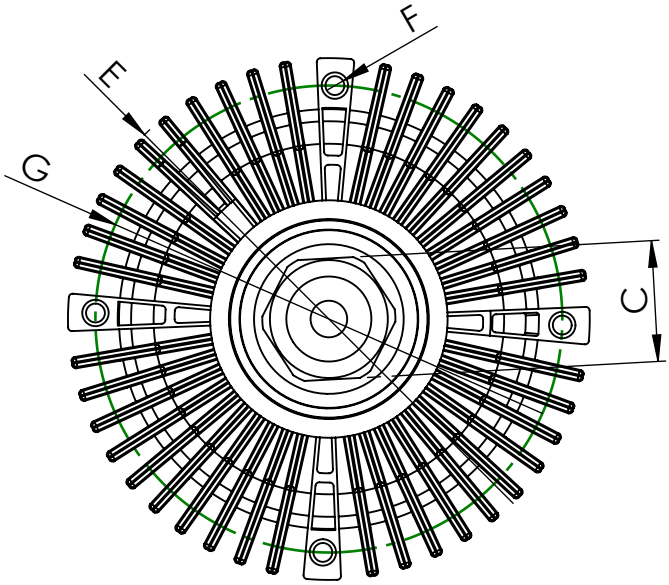

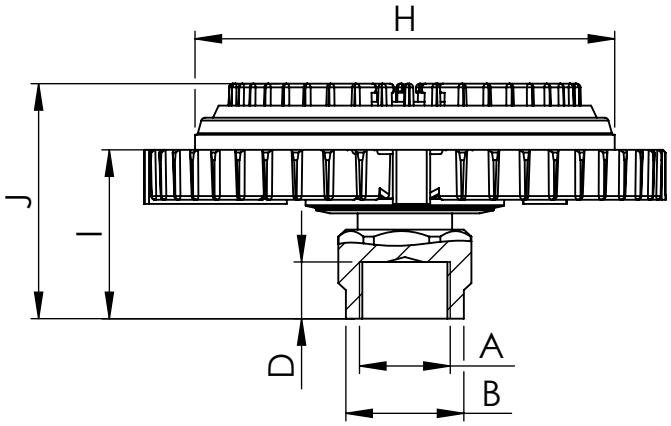

Rotation: Counterclockwise

Dimensional values

INPUT SHAFT				FAN CLUTCH			
Ref. nº	**Value**	**Ref. nº**	**Value**	**Ref. nº**	**Value**	**Ref. nº**	**Value**
A	M24x1.5 RH			E	∅138 mm		
B	∅31 mm			F	4x M6		
C	32 mm			G	∅123.5 ± 0.5 mm		
D	15 ± 2 mm			H	∅111 0 -0.3 mm		
				I	35.5 ± 0.5 mm		
				J	53.5 ± 1 mm		

Modification nº	Modified	Date	Reason
4			
3			
2			
1			

Comments

The drawing views may not match the actual part.

General Tolerance	ISO 2768 c-K
Material	
Drawn	30/06/20 J.S.
Checked	30/06/20 V.P.
Assembly	Technical sheet
Part name	Fan clutch
ID. Reference	8115102
Scale: 1/2	
Review: 0	
Sheet	**1/1**

cojali