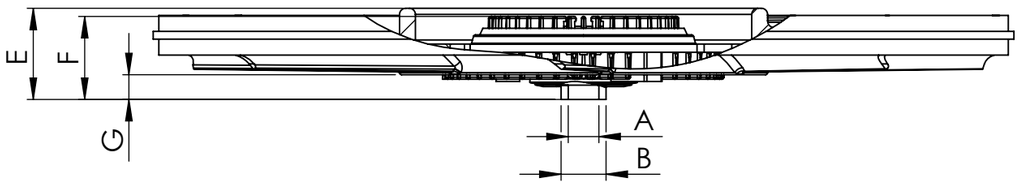

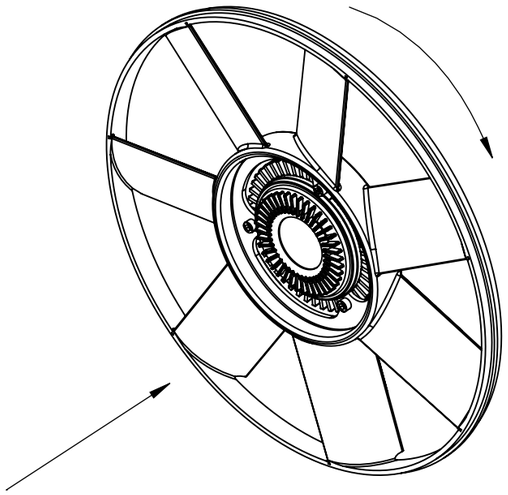

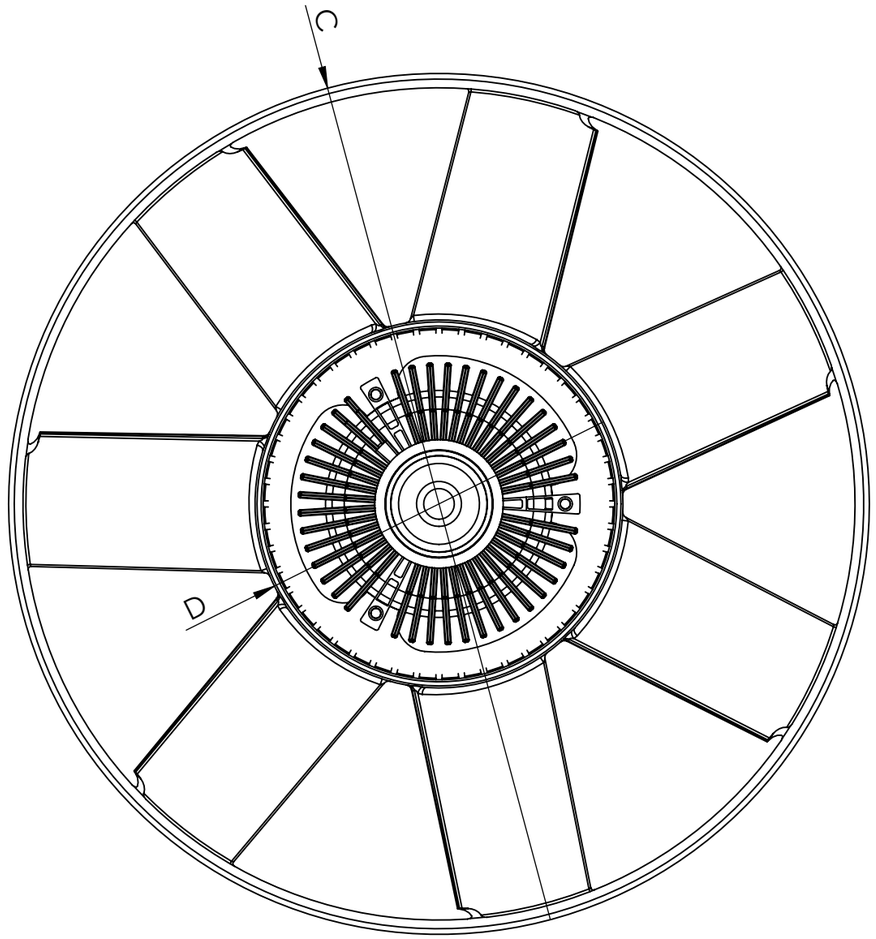

Dimensional values

INPUT SHAFT				FAN CLUTCH WHEEL			
Ref.nº	**Value**	**Ref.nº**	**Value**	**Ref.nº**	**Value**	**Ref.nº**	**Value**
A	∅10.5 mm			C	∅430 ± 3 mm		
B	∅15 -0.2 0 mm			D	∅181 ± 3 mm		
				E	50 ± 3 mm		
				F	46 ± 1 mm		
				G	7.5 ± 3 mm		
				Number of blades	7	**Configuration**	CW

Modification						
4				**Drawn**		
3				03/07/20 J.S.		
2				**Checked**		
1				03/07/20 V.P.		
nº	**Modified**	**Date**	**Reason**	**General Tolerance**	**Assembly**	Technical sheet
Comments				ISO 2768 c-K	**Part name**	Fan clutch wheel
The drawing views may not match the actual part				**Material**	**ID. Reference**	8137114
					Scale: 1/3	**Sheet 1/1**
					Review: 0	

cojali