## Technical sheet / Datos técnicos:

| | |
|---|---|
| Part number adaptable to / Referencia adaptable a | 51259020130 |
| Type of current / Tipo de corriente: | Direct current / Corriente continua |
| Voltage / Voltaje: | 24 V |
| Permissible medium / Medio de funcionamiento | Air / Aire |
| Operating temperature range / Rango de temperatura | -40°C to / a +80°C |
| Weight / Peso | 370 gr |

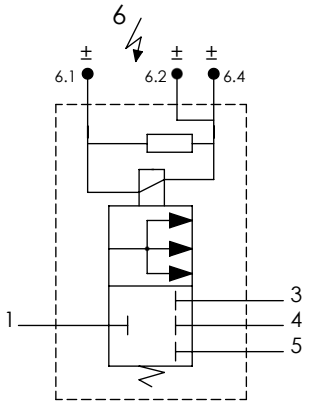


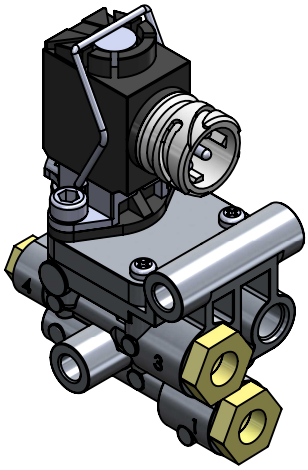

| Port / Conexión | Function / Función | Thread / Rosca |
|---|---|---|
| **1** | Supply / Alimentación | M16x1.5 + Adapter/Adaptador VOSS 232 NG8 |
| **3** | Delivery / Salida | M16x1.5 + Adapter/Adaptador VOSS 232 NG8 |
| **4-5** | Delivery / Salida | M10x1 + Adapter/Adaptador VOSS 230 NG6 |
| **6** | Conector / Conector | DIN 72585 A1-3 |

**Purpose / Propósito:** Allow air flow to delivery port when the solenoid is activated. / Permitir el paso de aire hacia la conexión de salida cuando se activa el solenoide.

**Installation requirements / Requisitos para la instalación:** The valve must be installed using 2 screw M8. / La vávula debe ser instalada usando 2 tornillos M8.

| Modification | | | | | | |
|---|---|---|---|---|---|---|
| 4 | | | | | Drawn | cojali |
| 3 | | | | | 18/06/20 S.F. | |
| 2 | | | | | Checked | |
| 1 | | | | | 18/06/20 O.V. | |
| nº | Modified | Date | Reason | General Tolerance | Assembly | - |
| Comments | | | | - | Part name | EGR solenoid |
| | | | | Material | ID. Reference | 2880217 |
| | | | | - | Scale: - | Sheet 1/2 |
| | | | | | Review: 0 | |

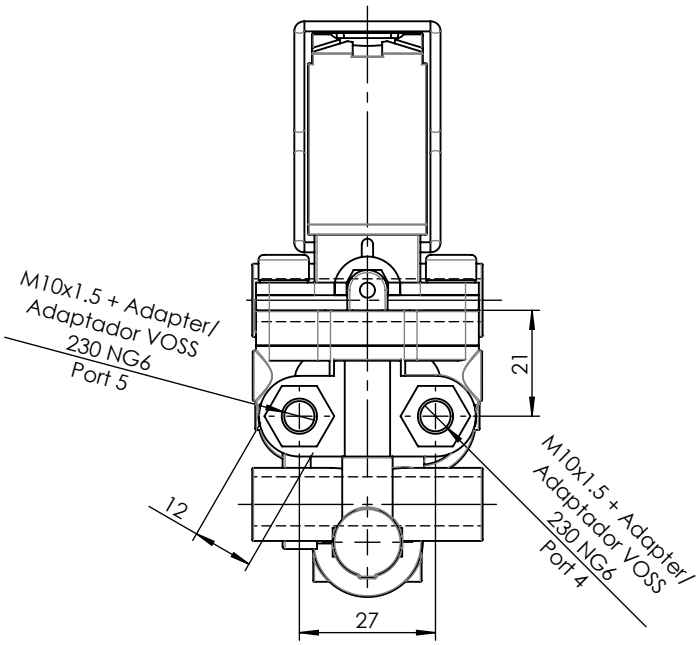


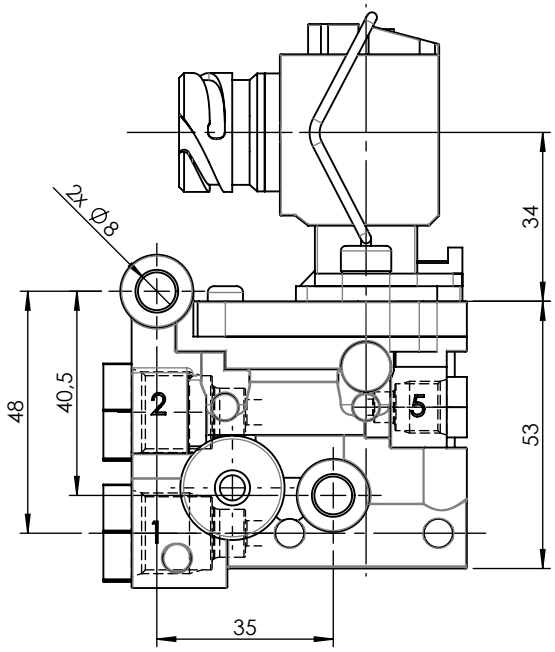


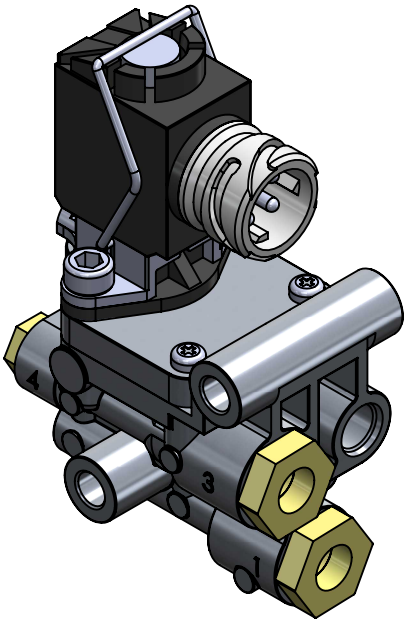


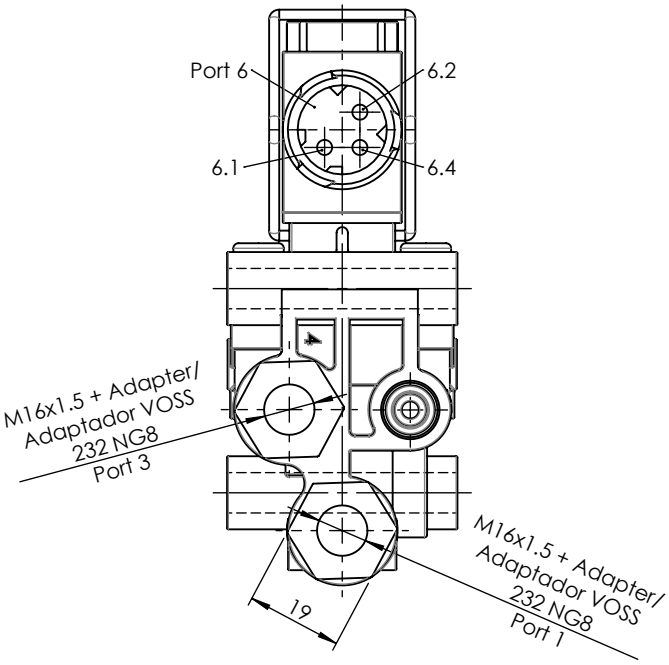


| Modification | | | | | | | |
|---|---|---|---|---|---|---|---|
| 4 | | | | | Drawn | cojali | |
| 3 | | | | | 18/06/20 S.F. | | |
| 2 | | | | | Checked | | |
| 1 | | | | | 18/06/20 O.V. | | |
| nº | Modified | Date | Reason | General Tolerance | Assembly | - | |
| Comments | | | | ISO 2768 c-K | Part name | EGR solenoid | |
| | | | | Material | ID. Reference | 2880217 | |
| | | | | - | Scale: 2/3 | | Sheet 2/2 |
| | | | | | Review: 0 | | |

PG/18/02 rev.1