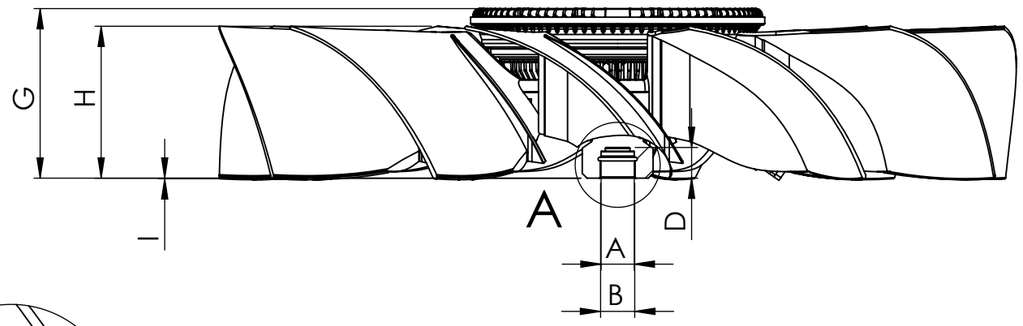

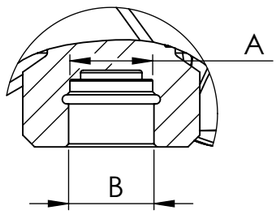

DETAIL A
SCALE 1 : 2

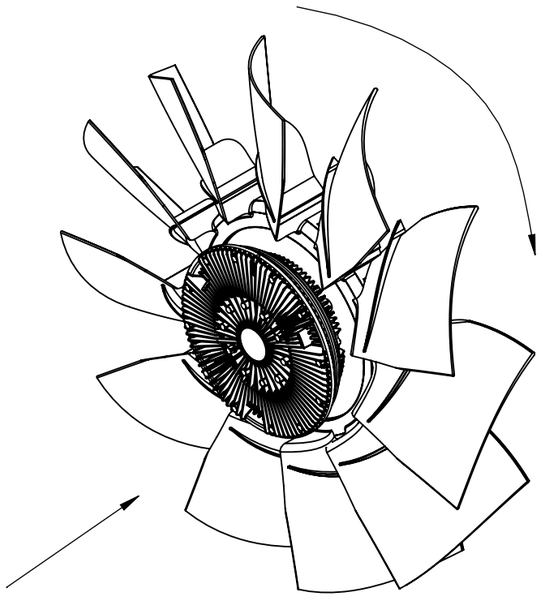

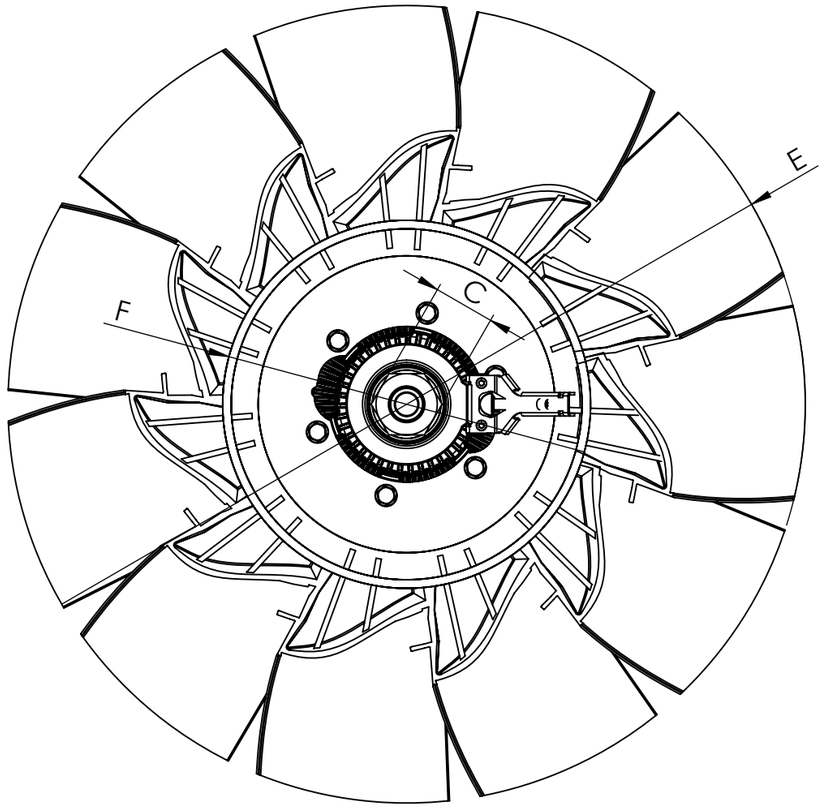

Dimensional values

INPUT SHAFT				FAN CLUTCH WHEEL			
Ref.nº	**Value**	**Ref.nº**	**Value**	**Ref.nº**	**Value**	**Ref.nº**	**Value**
A	∅27 H8 mm			E	∅650 ±3 mm		
B	M30x2 LH			F	∅303 ±3 mm		
C	50			G	138.2 ± 1 mm		
D	25±2 mm			H	124.2 ±3 mm		
				I	0.2 ±3 mm		
				Number of blades	11	**Configuration**	CW

Modification

nº	Modified	Date	Reason
4			
3			
2			
1	Hernández	27/10/25	Correct dimension H.

Comments

Drawn	29/05/25 E.H.
Checked	29/05/25 R.U.
General Tolerance	ISO 2768 c-K
Material	
Assembly	Technical sheet
Part name	T13
ID. Reference	7085417
Scale: 1/5	
Review: 1	
Sheet 1/1	

cojali