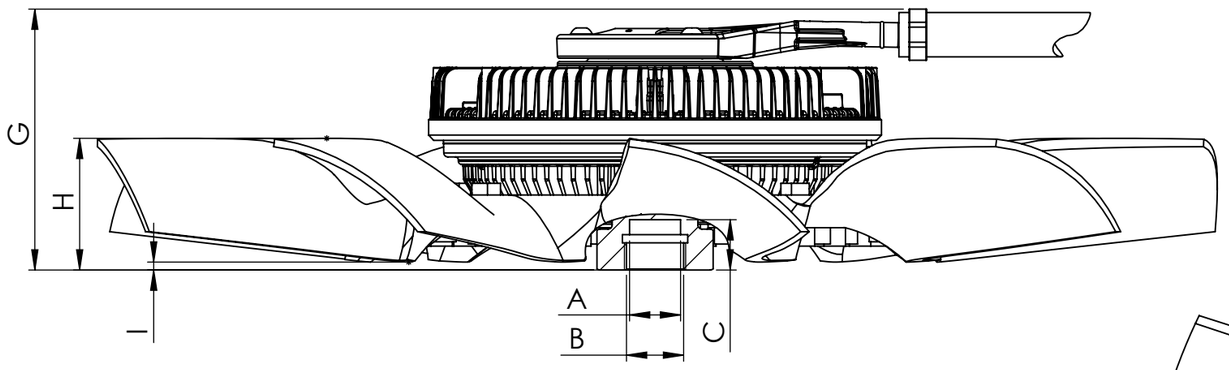

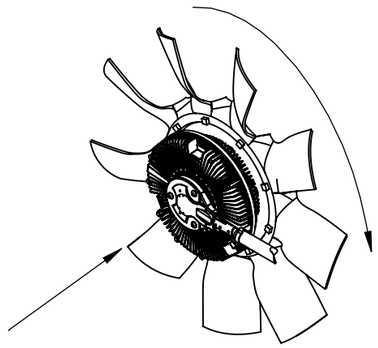

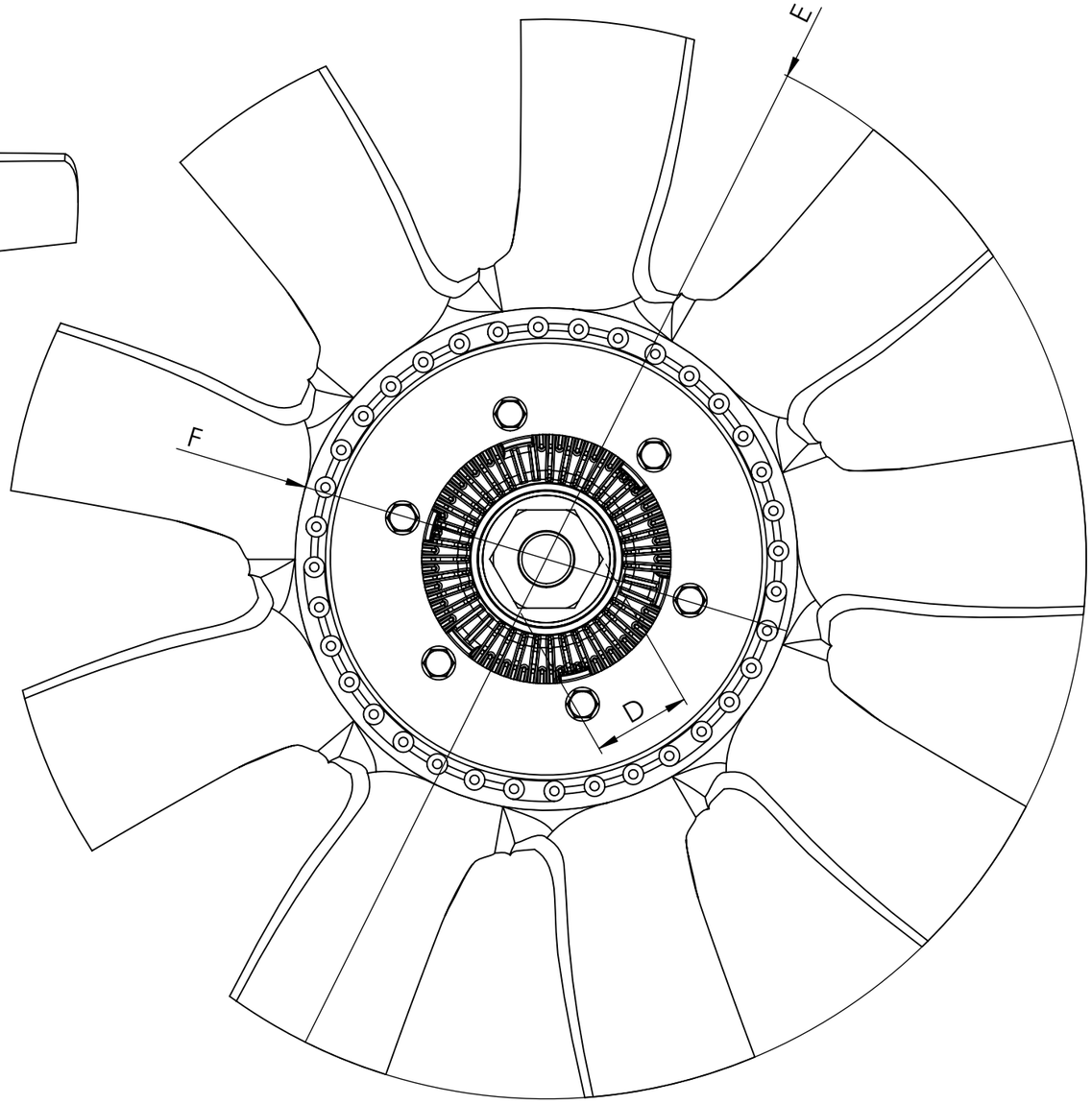

Dimensional values

INPUT SHAFT				FAN CLUTCH WHEEL			
Ref.nº	**Value**	**Ref.nº**	**Value**	**Ref.nº**	**Value**	**Ref.nº**	**Value**
A	∅25 H8 mm			E	∅550 ± 3 mm		
B	M30 x 2 LH			F	∅253 ± 3 mm		
C	24.6 ± 2 mm			G	127.6 ± 1 mm		
D	50 mm			H	70.7 ± 0.5 mm		
				I	4.7 ± 1 mm		
				Number of blades	9	**Configuration**	CW

Modification				
nº	**Modified**	**Date**	**Reason**	
4				
3				
2				
1				

Comments

Drawn	24/09/21 S.S.
Checked	24/09/21 R.U.
General Tolerance	ISO 2768 c-K
Material	

cojali

Assembly	Technical sheet
Part name	Fan clutch wheel
ID. Reference	8521924
Scale: 1/3	**Sheet 1/1**
Review: 0	