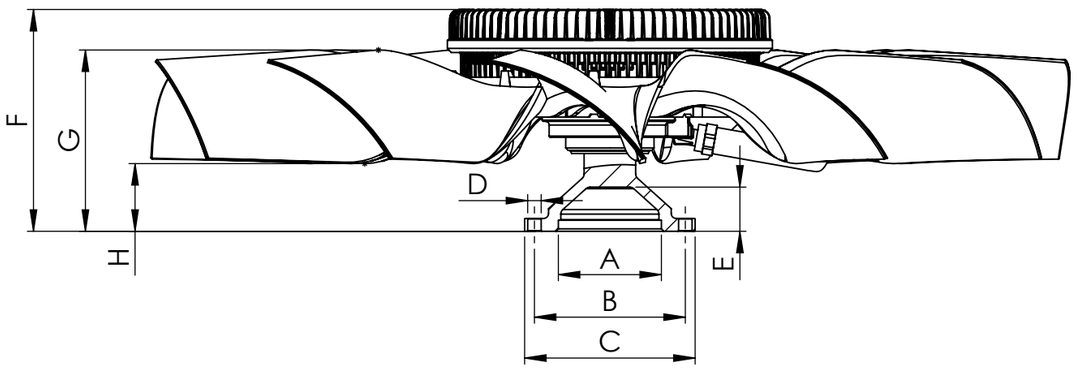

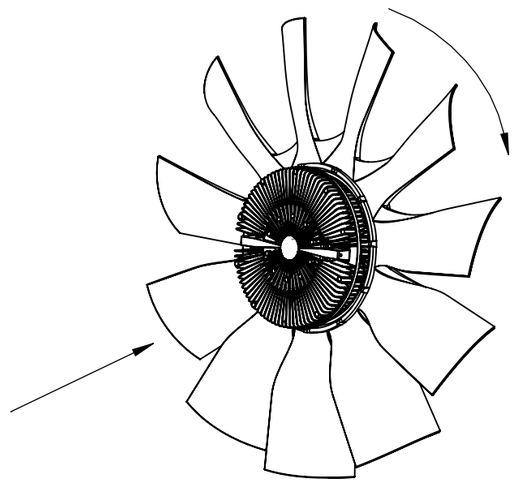

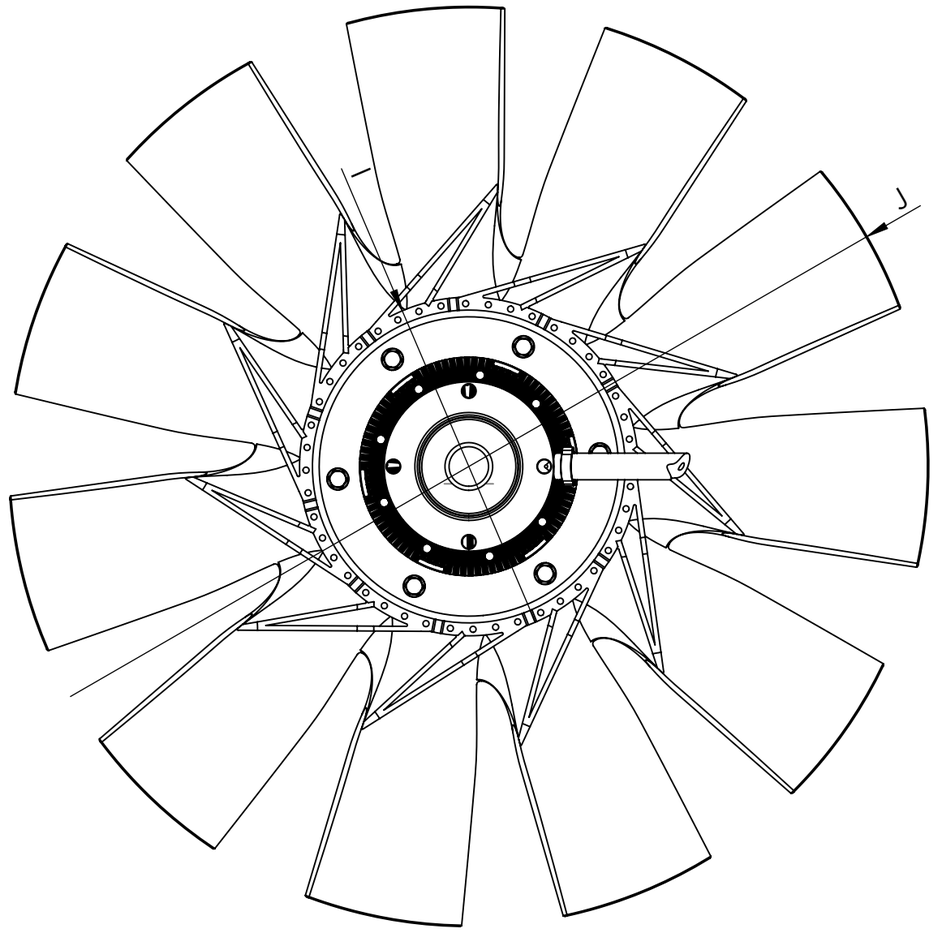

Dimensional values

INPUT SHAFT				FAN CLUTCH WHEEL			
Ref.nº	**Value**	**Ref.nº**	**Value**	**Ref.nº**	**Value**	**Ref.nº**	**Value**
A	Ø84 H8 mm			F	180.8 ± 1 mm		
B	Ø123 mm			G	147.2 ± 3 mm		
C	Ø139 mm			H	52.2 ± 3 mm		
D	4x Ø11 mm			I	Ø278 ± 3 mm		
E	36 ± 2 mm			J	Ø750 ± 3 mm		
				Number of blades	11	**Configuration**	CW

Modification

nº	Modified	Date	Reason
4			
3			
2			
1	J.S.	06/05/20	Change sheet format and review dimensions

Comments

Drawn	03/03/20 S.F.
Checked	03/03/20 A.D.
General Tolerance	ISO 2768 c-K
Material	

cojali

Assembly	Technical sheet
Part name	Fan clutch wheel
ID. Reference	7075417
Scale: 1/5	
Review: 1	
Sheet	**1/1**