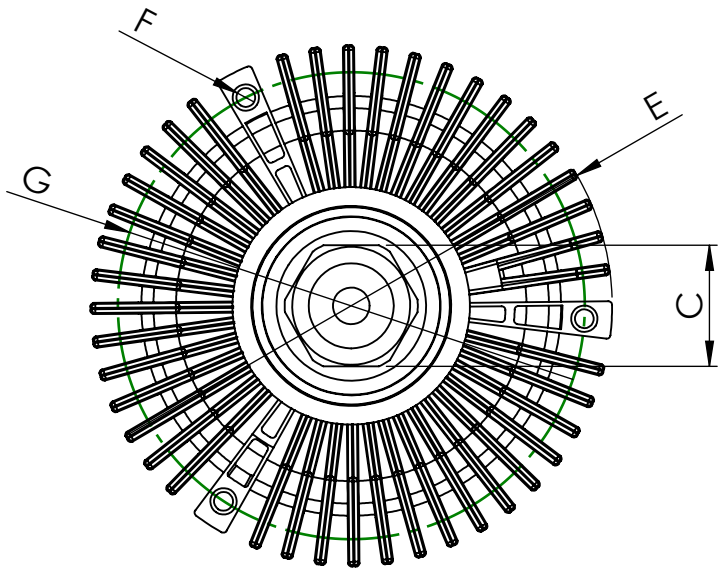

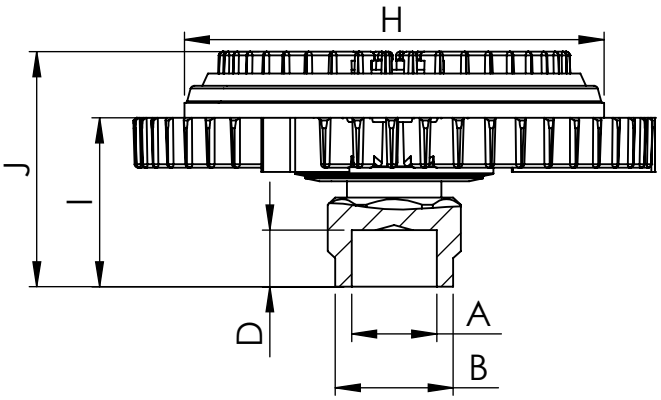

Rotation: Clockwise

Dimensional values

INPUT SHAFT				FAN CLUTCH			
Ref. nº	**Value**	**Ref. nº**	**Value**	**Ref. nº**	**Value**	**Ref. nº**	**Value**
A	M24x1,5 LH			E	∅160 mm		
B	∅31 mm			F	3x M6		
C	32 mm			G	∅147 ±0,5 mm		
D	16 ±2 mm			H	∅135 0 -0,3 mm		
				I	38,5 ±0,5 mm		
				J	60 ±1 mm		

Modification

nº	Modified	Date	Reason
4			
3			
2			
1	L.M.G	04/04/24	Modify dimension D,I and J.

Comments

The drawing views may not match the actual part.

General Tolerance	ISO 2768 c-K
Material	
Drawn	30/06/20 S.F.
Checked	30/06/20 A.D.
Assembly	Technical sheet
Part name	EVVL
ID. Reference	8111113
Scale: 1/2	
Review: 1	
Sheet	**1/1**

cojali