Technical data / Datos técnicos:

Weight / Peso	140 g

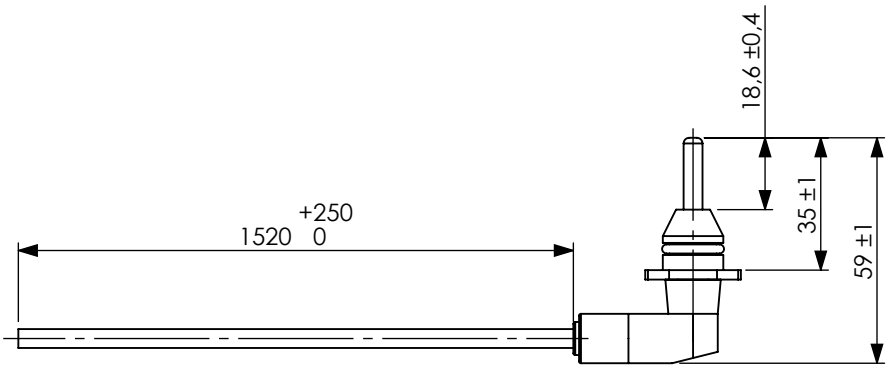

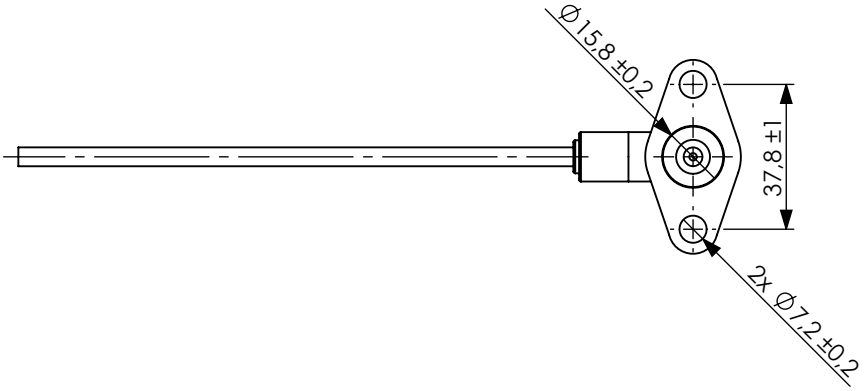

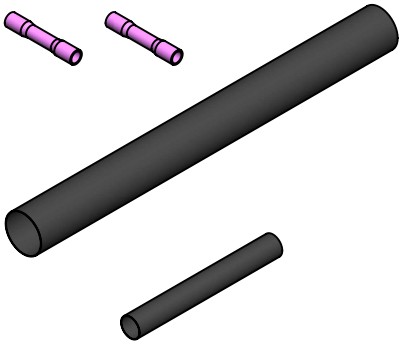

INCLUDED/INCLUIDO

Modification						
4					Drawn	cojali
3					30/01/24 S.F.	
2					Checked	
1	S.S.	17/09/25	Format update		30/01/24 O.V.	
nº	Modified	Date	Reason	General Tolerance	Assembly	-
Comments				ISO 2768 c-K	Part name	Temperature sensor/Sensor de temperatura
				Material	ID. Reference	2260940
				-	Scale: 1/2	Sheet 1/1
					Review: 1	