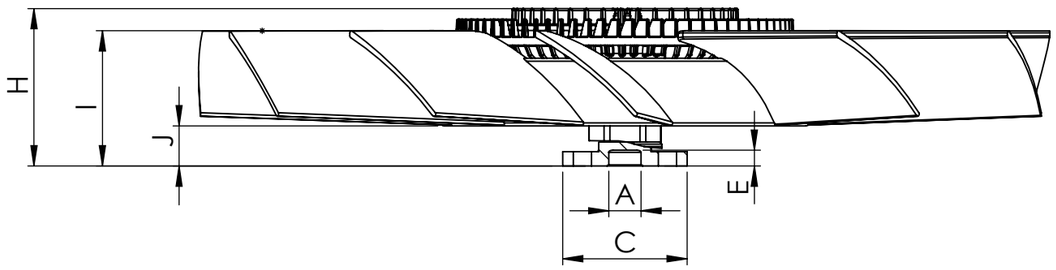

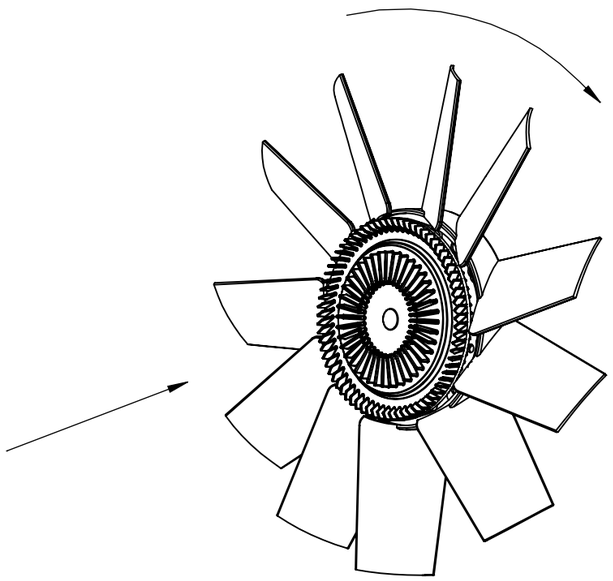

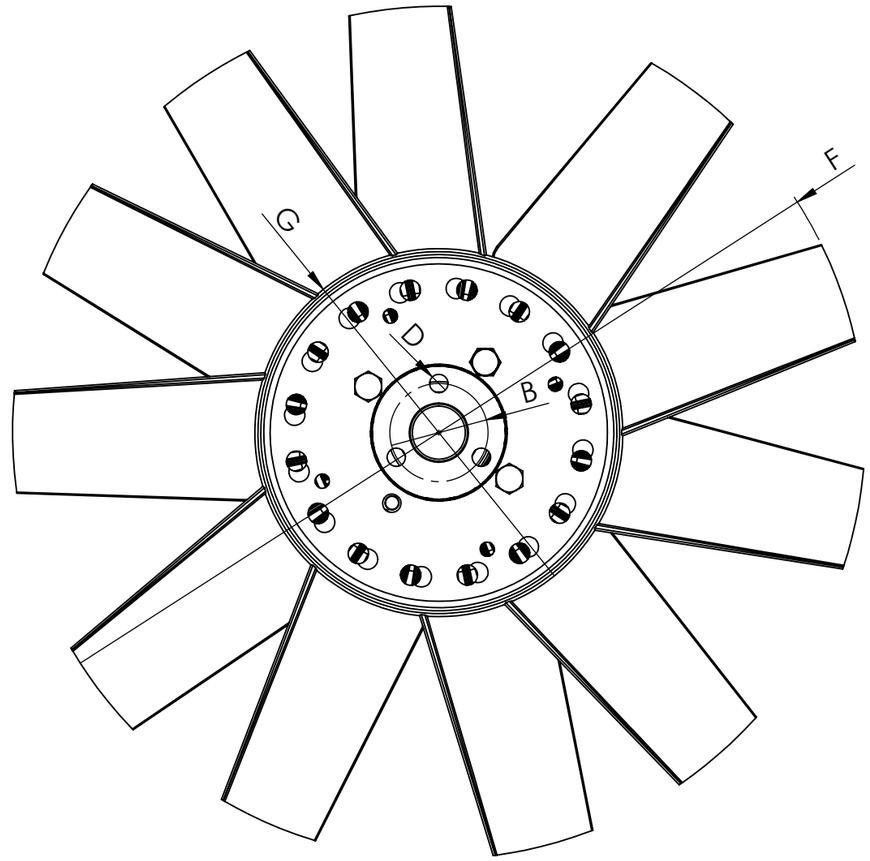

Dimensional values

INPUT SHAFT				FAN CLUTCH WHEEL			
Ref.nº	**Value**	**Ref.nº**	**Value**	**Ref.nº**	**Value**	**Ref.nº**	**Value**
A	∅28 0 +0.05 mm			F	∅417 ±3 mm		
B	∅48 mm			G	∅179 ±3 mm		
C	∅65.2 mm			H	76.2 ± 1 mm		
D	3x ∅9 mm			I	68.1 ±3 mm		
E	7.7±2 mm			J	21.1 ±3 mm		
				Number of blades	11	**Configuration**	CW

Modification

nº	Modified	Date	Reason
4			
3			
2			
1	E.H.	01/07/24	Add adapter and update dimmensions and sheet format.

Comments

Drawn	02/07/20 S.F.
Checked	02/07/20 A.D.
General Tolerance	ISO 2768 c-K
Material	

cojali

Assembly	Technical sheet
Part name	EVVL
ID. Reference	8521149
Scale: 1/3	
Review: 1	
Sheet	**1/1**