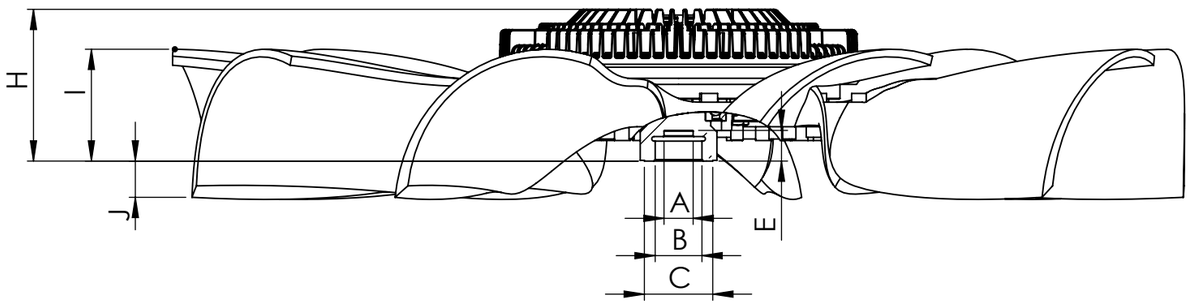

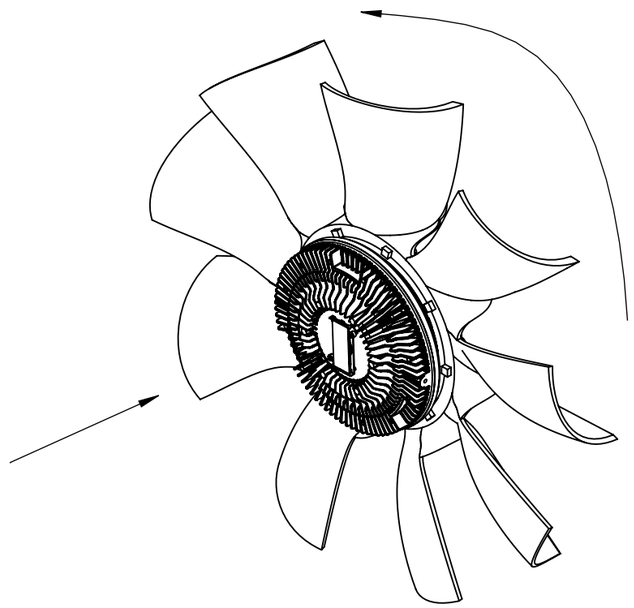

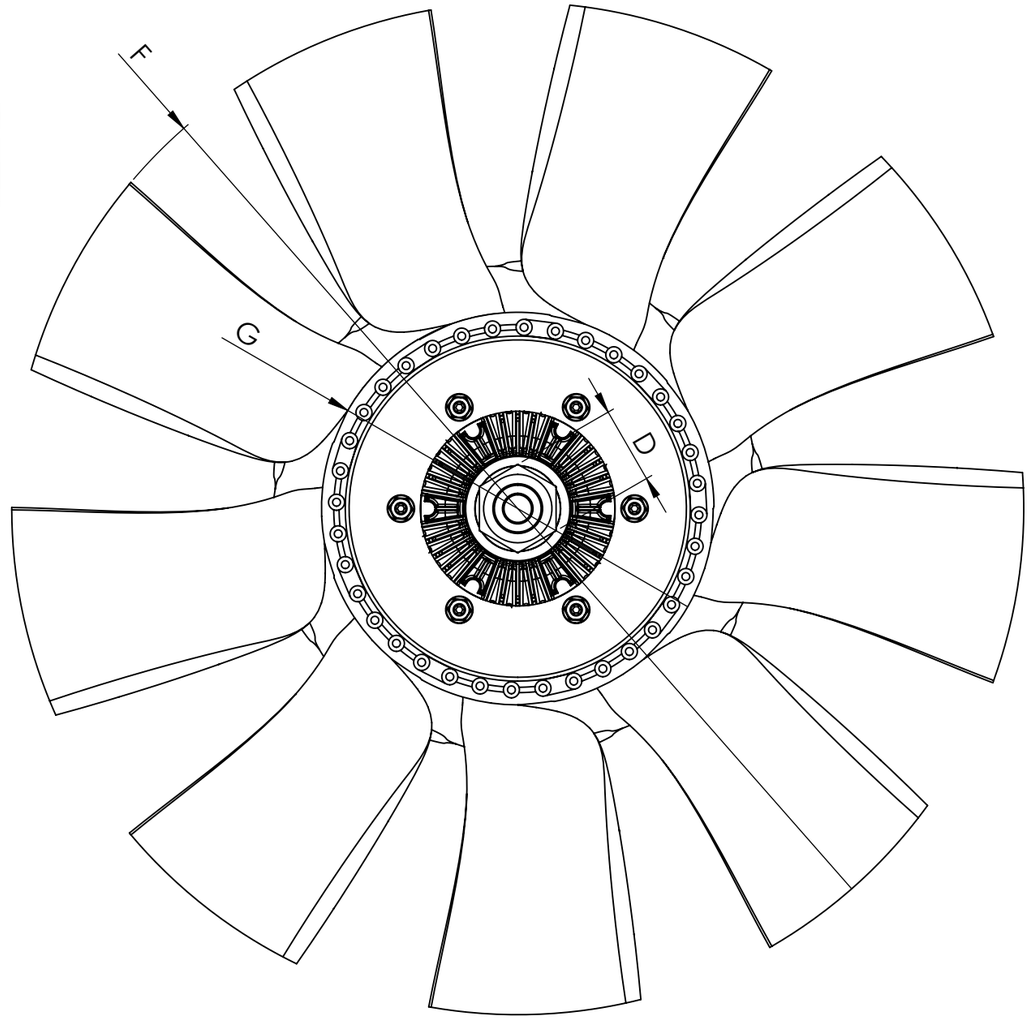

Dimensional values

INPUT SHAFT				FAN CLUTCH WHEEL			
Ref.nº	**Value**	**Ref.nº**	**Value**	**Ref.nº**	**Value**	**Ref.nº**	**Value**
A	∅19 mm			F	∅660 ±3 mm		
B	M30 x 2 RH			G	∅250 ±3 mm		
C	∅44.6 mm			H	99 ± 1 mm		
D	50 mm			I	68.4 ±3 mm		
E	20±2 mm			J	23.6 ±3 mm		
				Number of blades	9	**Configuration**	CCW

Modification

nº	Modified	Date	Reason
4			
3			
2			
1			

Comments

Drawn	21/02/25 E.H.
Checked	21/02/25 R.U.
General Tolerance	ISO 2768 c-K
Material	

cojali

Assembly	Technical sheet
Part name	B11
ID. Reference	7275100
Scale: 1/4	**Sheet 1/1**
Review: 0	