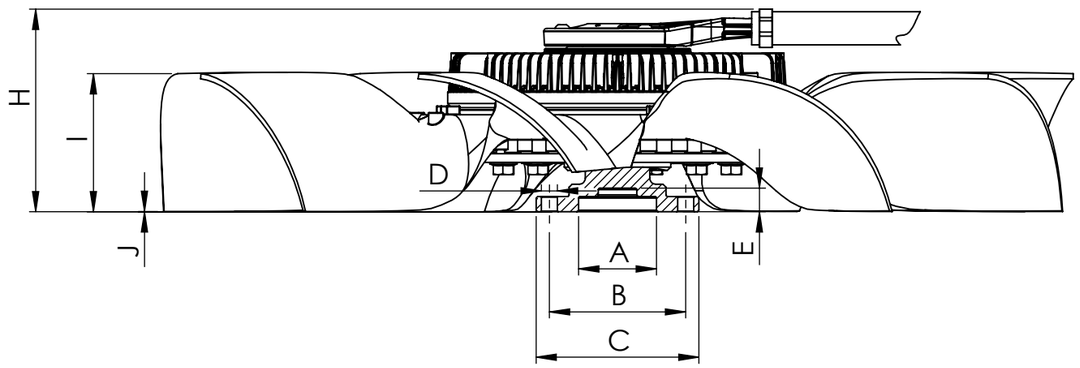

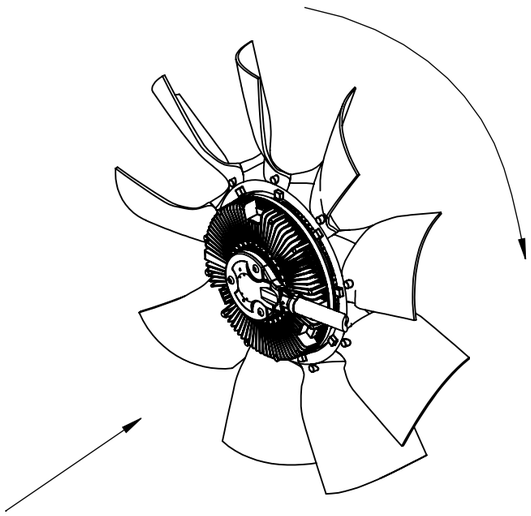

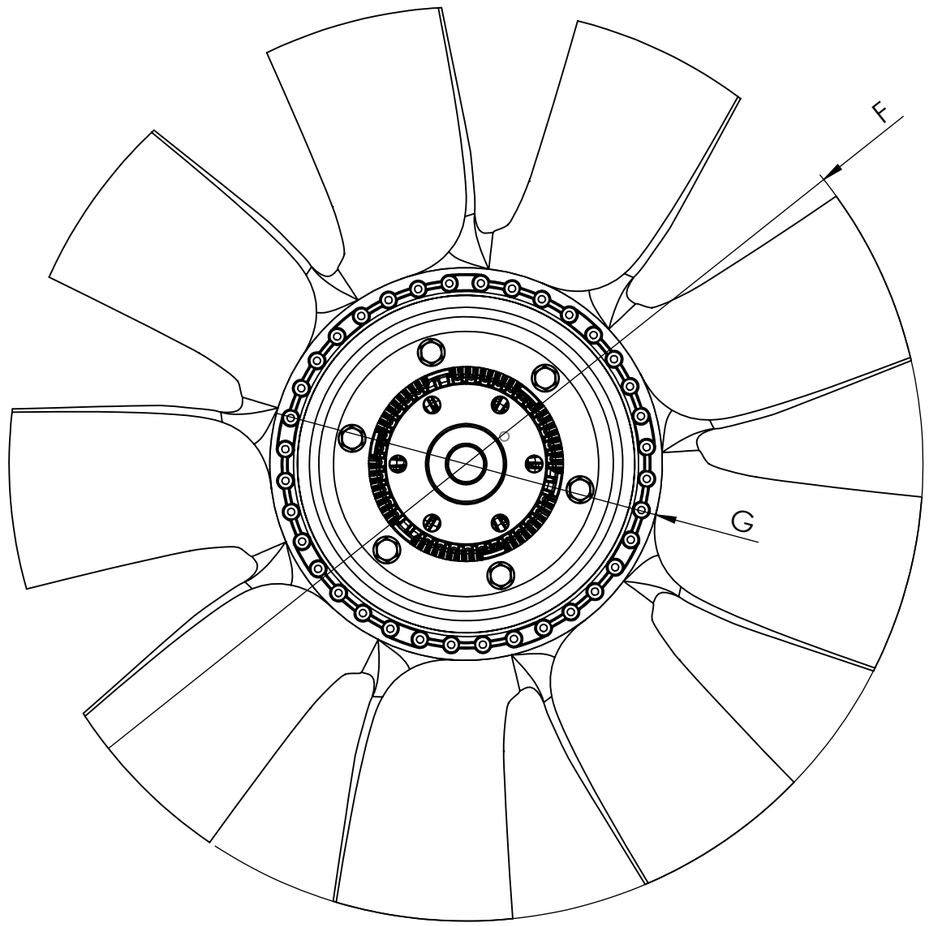

Dimensional values

INPUT SHAFT				FAN CLUTCH WHEEL			
Ref.nº	**Value**	**Ref.nº**	**Value**	**Ref.nº**	**Value**	**Ref.nº**	**Value**
A	∅50,8 H8 mm			F	∅596 ±3 mm		
B	∅88,9 mm			G	∅256 ±3 mm		
C	∅106,2 mm			H	132,1 ± 1 mm		
D	6x ∅10,5 mm			I	89 ±3 mm		
E	15,4±2 mm			J	0,8 ±3 mm		
				Number of blades	9	**Configuration**	CW

Modification				
4				
3				
2				
1				
nº	**Modified**	**Date**	**Reason**	

Comments

Drawn	14/05/24 L.M.G
Checked	14/05/24 R.U
General Tolerance	ISO 2768 c-K
Material	

cojali

Assembly	Technical sheet
Part name	F13
ID. Reference	8521926
Scale: 1/4	
Review: 0	
Sheet	**1/1**